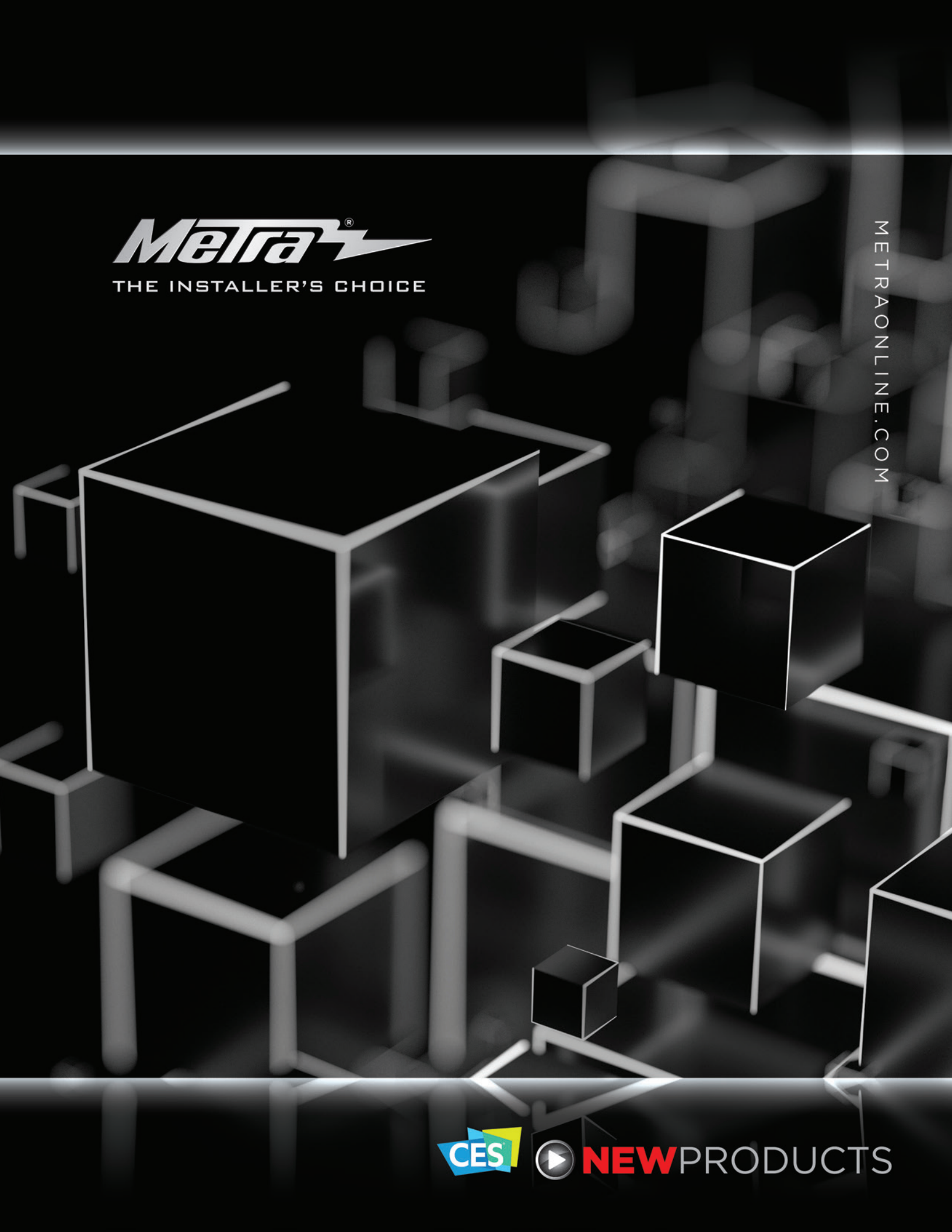
METRA®
THE INSTALLER'S CHOICE
METRAONLINE.COM
CES
NEWPRODUCTS

The Power of Metra's Fit Guide - Anytime. Anywhere.

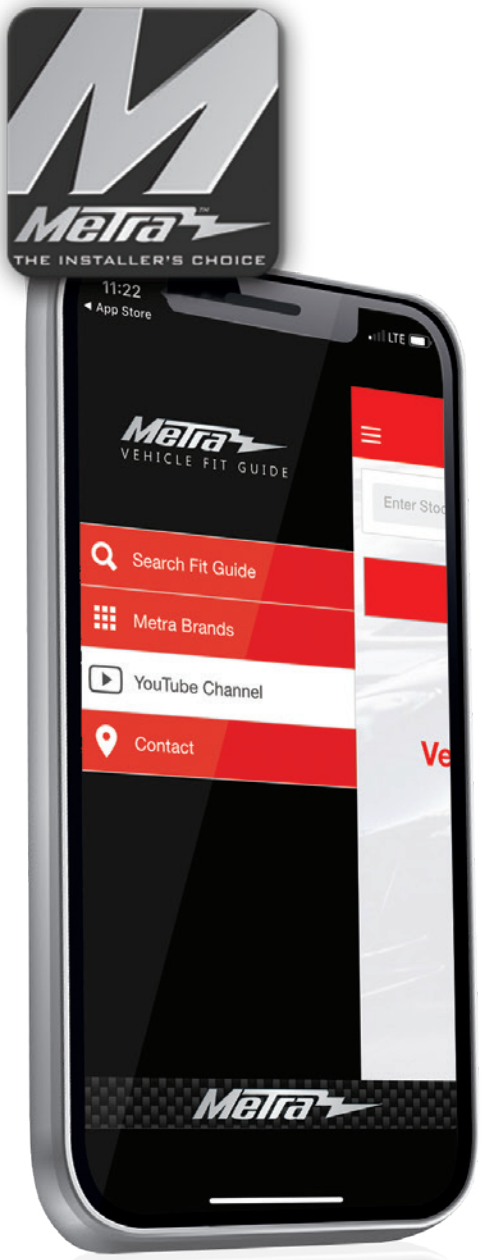

The iPhone and Android apps are convenient intranet portals for quick access to Metra's parts, specs, product info, installation videos and more:

- Enables an easy search of not only Metra products, but its other brands as well.
- Allows dealers and customers to browse and filter parts by vehicle specifics such as make, model, year and trim.
- Lets dealers quickly place orders for parts – no online payment needed, Metra does the rest.
- Showcases Metra's latest product videos located on its YouTube channel.

Download on the App Store

ANDROID APP ON Google play

Download it FREE at the Apple Store or Google Play

WARNING: This catalog does not advise whether a State of California Proposition 65 warning is required for a particular item of merchandise. To learn whether a particular item of merchandise requires a California Proposition 65 warning, please be sure to look up and read the particular merchandise's listing on Metra's website www.MetraOnline.com, as well as read the particular merchandise's packaging. When a California Proposition 65 warning is present on Metra's website listing for the particular merchandise, or on the particular merchandise's packaging, a compliant California Proposition 65 warning is to be provided to the purchasing California consumer prior to the sale of the particular merchandise.

TABLE OF CONTENTS

NEW PIONEER SPECIFIC DASH KITS 4-11
JEEP / RAM 4-5
FORD 5-7
GM 7-8
TOYOTA 9-11
UNIVERSAL 11

NEW DASH KITS 12-20
CHEVROLET **CAPTIVA SPORT** 12
FORD **MUSTANG / EDGE / TRANSIT / RANGER / EXPLORER** 13
DODGE **CHARGER / RAM** 13-14
CHRYSLER **300** 14
JEEP **CHEROKEE / COMMANDER** 14-15
KIA **FORTE** 15
HYUNDAI **ELANTRA / SANTA FE** 15
MAZDA **5** 16
NISSAN **KICKS / ALTIMA** 16-17
HONDA **CIVIC EX** 17
LEXUS **RX300** 17
TOYOTA **COROLLA** 18
MERCEDES **SPRINTER / E-CLASS** 18
SUBARU **ASCENT / BRZ** 18-19
VOLKSWAGEN **JETTA** 19
MINI **COOPER** 20
UNIVERSAL **DOUBLE-DIN MOUNTING SOLUTION** 20

NEW SPEAKER ADAPTERS 20
TOYOTA / VW 20

NEW HEISE PRODUCTS 22-24
SUPER SLIM LINE SERIES 22
AUXILIARY LIGHTING & REPLACEMENT BULBS 23
RGB & RGBW PRODUCTS 24-25

NEW POWERSPORTS PRODUCTS 24-25
POLARIS RADIO KITS 26
AUDIO PRODUCTS 27
RGB & RGBW PRODUCTS 28-29

NEW SADDLE TRAMP 30-31
MOTORCYCLE ACCESSORIES 30
MOTORCYCLE KITS & HARNESS 31

FITS JEEP

108-CH1B

PATENT PENDING P

JEEP **WRANGLER** 2011-2017 **JK** (only) 2018

Designed specifically for the Pioneer DMH-C5500NEX 8" radio

- Cutting template included for necessary dash modifications
- Painted scratch-resistant matte black

COMPACT CHASSIS SHALLOW MOUNT

107-CH3B

PATENT PENDING P

JEEP **WRANGLER JL** 2018-UP* | **GLADIATOR** 2020-UP*

- Designed for most shallow mount radios like the Alpine iLX-W650 (refer to radio manufacturer for current models)
- Special brackets included for Pioneer modular radios DMH-C2550NEX and DMHC2500NEX (refer to radio manufacturer for current models)
- Painted scratch-resistant matte black to match the factory finish

108-CH4DK

PATENT PENDING P

JEEP **COMMANDER** 2006-2007

Designed specifically for the Pioneer DMH-C5500NEX 8" radio

- Painted dark khaki to match the factory dash panel

108-CH4G

PATENT PENDING P

JEEP **COMMANDER** 2006-2007

Designed specifically for the Pioneer DMH-C5500NEX 8" radio

- Painted gray to match the factory finish

FITS RAM / FORD

108-CH2B Turbo Touch PATENT PENDING P

RAM **TRUCKS 1500/2500/3500 2013-2017** (with 5" or 8" touchscreen)

Designed specifically for the Pioneer DMH-C5500NEX 8" radio

- Touchscreen display for climate, audio interfacing and personalization features
- Included interface for climate and steering wheel functions
- Painted scratch-resistant matte black to match the factory finish

108-FD1CH Turbo Touch PATENT PENDING P

FORD **F-150 2015-2017** | **F-250/350/450 XL** (with CD) **XLT 2017**

Designed specifically for the Pioneer DMH-C5500NEX 8" radio

- Touchscreen display for climate, audio interfacing and personalization features
- Included interface for climate and steering wheel functions
- Integrated passenger airbag indicator
- Painted charcoal to match the factory finish

108-FD2B Turbo Touch PATENT PENDING P

FORD **F-150 2013-2014** (with 4.2" screen)

Designed specifically for the Pioneer DMH-C5500NEX 8" radio

- Touchscreen display for climate, audio interfacing and personalization features
- Included interface for climate and steering wheel functions
- Integrated passenger airbag indicator and hazard button
- Painted scratch-resistant matte black

108-FD3B PATENT PENDING P

FORD **F-150 2013-2014** (with CD player, without color screen)

F-150 XL 2009-2013 (with CD player) | **F-150 XLT 2009-2012** (without NAV)

Designed specifically for the Pioneer DMH-C5500NEX 8" radio

- Painted scratch-resistant matte black to match the factory finish

FITS FORD

108-FD4CH Turbo Touch PATENT PENDING P

FORD **MUSTANG 2010-2014**

Designed specifically for the Pioneer DMH-C5500NEX 8" radio

- Touchscreen display for climate, audio interfacing and personalization features
- Included interface for climate and steering wheel functions
- Painted charcoal to match the factory finish

108-FD5CH Turbo Touch PATENT PENDING P

FORD **MUSTANG 2015-UP*** (with 4.2" screen)

Designed specifically for the Pioneer DMH-C5500NEX 8" radio

- Touchscreen display for climate, audio interfacing and personalization features
- Included interface for climate and steering wheel functions
- Painted charcoal to match the factory finish

108-FD6CH Turbo Touch PATENT PENDING P

FORD **MUSTANG 2015-UP*** (with 8" screen)

Designed specifically for the Pioneer DMH-C5500NEX 8" radio

- Touchscreen display for climate, audio interfacing and personalization features
- Included interface for climate and steering wheel functions
- Painted charcoal to match the factory finish

108-FD7B PATENT PENDING P

FORD **SUPER DUTY F-250/350/450/550 XL 2017-UP***

(without color screen)

Designed specifically for the Pioneer DMH-C5500NEX 8" radio

- Painted scratch-resistant matte black

FITS FORD / CHEVROLET

108-FD8CH

Turbo Touch | PATENT PENDING | P

FORD **EXPLORER** 2011-2019 (with factory 8" screen)

Designed specifically for the Pioneer DMH-C5500NEX 8" radio

- Touchscreen display for climate, audio interfacing and personalization features
- Included interface for climate and steering wheel functions
- Painted charcoal and matte black to match the factory finish

108-FD9B

PATENT PENDING | P

FORD **RANGER** 2019-UP* (with factory 4.2" screen)

Designed specifically for the Pioneer DMH-C5500NEX 8" radio

- Parts included for both ISO-DIN and ISO-DDIN installations
- Includes parts that allow the retentions of the factory climate control panel, passenger airbag indicator, and hazard button
- Painted scratch-resistant matte black to match the factory appearance

108-GM1G

PATENT PENDING | P

CHEVROLET **SILVERADO 1500** | GMC **SIERRA 1500** 2014-2018
CHEVROLET **SILVERADO 2500/3500** | GMC **SIERRA 2500/3500** 2015-2018
CHEVROLET **SILVERADO 1500 LD** | GMC **SIERRA 1500 LIMITED** 2019

Designed specifically for the Pioneer DMH-C5500NEX 8" radio

- Painted gunmetal gray

108-GM2B

PATENT PENDING | P

CHEVROLET **TAHOE** | **AVALANCHE** | GMC **YUKON** 2007-2014
CHEVROLET **SILVERADO** | GMC **SIERRA** 2007-2014 (with center console)

Designed specifically for the Pioneer DMH-C5500NEX 8" radio

- Painted scratch-resistant matte black
- Replacement dash panel allows for minimal dash modifications

FITS CHEVROLET / CADILLAC

107-GM3B

PATENT PENDING P

CHEVROLET **CAMARO** 2016-2020

Designed specifically for the Pioneer modular radios DMH-C2550NEX and DMHC2500NEX
(refer to radio manufacturer for current models)

- Painted scratch-resistant matte black to match the factory finish

108-GM3B

PATENT PENDING P

CHEVROLET **CAMARO** 2016-2020

Designed specifically for the Pioneer DMH-C5500NEX 8" radio

- Painted scratch-resistant matte black to match the factory finish

107-GM4B

PATENT PENDING P

CHEVROLET **SILVERADO 1500** | GMC **SIERRA 1500** 2019-UP*
SILVERADO 2500/3500 | **SIERRA 2500/3500** 2020-UP*

Designed specifically for the Pioneer modular radios DMH-C2550NEX and DMHC2500NEX
(refer to radio manufacturer for current models)

- Blank out plate included to replace the factory radio control buttons
- Painted scratch-resistant matte black to match the factory finish

COMING SOON
NEW TECH

107-GM5B

Turbo 2 PATENT PENDING P

CADILLAC **SRX** 2010-2012

- Integrated OLED screen to retain display of climate control information
- Trim panel retains use of the factory climate control buttons
- Designed for most shallow mount radios like the Alpine iLX-W650 (refer to radio manufacturer for current models)
- Special brackets included for Pioneer modular radios DMH-C2550NEX and DMHC2500NEX

FITS TOYOTA

108-TO1B

PATENT PENDING P

TOYOTA **TUNDRA** 2007-2013 | **SEQUOIA** 2008-UP*

Designed specifically for the Pioneer DMH-C5500NEX 8" radio

- Painted scratch-resistant matte black

108-TO1HG

PATENT PENDING P

TOYOTA **TUNDRA** 2007-2013 | **SEQUOIA** 2008-UP*

Designed specifically for the Pioneer DMH-C5500NEX 8" radio

- Painted high gloss black

108-TO1CHG

PATENT PENDING P

TOYOTA **TUNDRA** 2007-2013 | **SEQUOIA** 2008-UP*

Designed specifically for the Pioneer DMH-C5500NEX 8" radio

- Painted high gloss charcoal (matches 2010-UP*)

108-TO2B

PATENT PENDING P

TOYOTA **TACOMA** 2012-2015

Designed specifically for the Pioneer DMH-C5500NEX 8" radio

- Painted scratch-resistant matte black

FITS TOYOTA

108-TO2CHG PATENT PENDING P

TOYOTA **TACOMA** 2012-2015

Designed specifically for the Pioneer DMH-C5500NEX 8" radio

• Painted high gloss charcoal

108-TO3B PATENT PENDING P

TOYOTA **HIGHLANDER** 2008-2012 (without NAV)

Designed specifically for the Pioneer DMH-C5500NEX 8" radio

• Painted scratch-resistant matte black

108-TO3BR PATENT PENDING P

TOYOTA **HIGHLANDER** 2008-2012 (without NAV)

Designed specifically for the Pioneer DMH-C5500NEX 8" radio

• Painted brown to match the factory finish

108-TO4 PATENT PENDING P

TOYOTA **CAMRY** 2015-2017

Designed specifically for the Pioneer DMH-C5500NEX 8" radio

• Built in multiple pieces and painted two-tone to match the factory appearance

FITS TOYOTA / UNIVERSAL

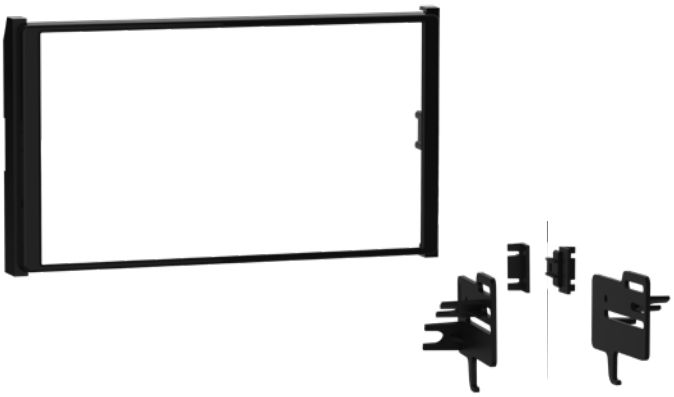

108-TO5HG

PATENT PENDING | P

TOYOTA **COROLLA HATCHBACK 2019-UP*** | **COROLLA 2020-UP***

Designed specifically for the Pioneer DMH-C5500NEX 8" radio

- Painted high gloss black to match the factory finish

108-UN01

PATENT PENDING

UNIVERSAL **TRIM**

Designed specifically for the Pioneer DMH-C5500NEX 8" radio

- 3/8" border trim that snaps onto the Pioneer's separate screen
- Designed for the finishing touch to a custom-built install

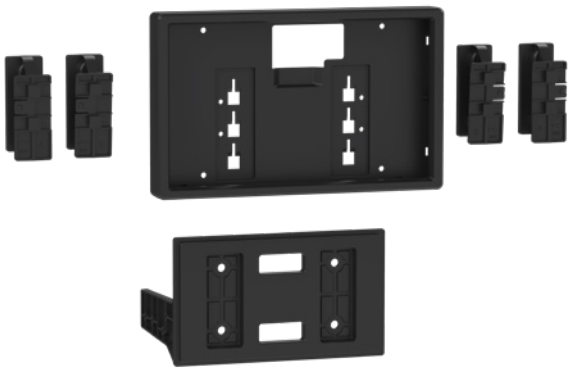

108-UN02

PATENT PENDING

UNIVERSAL **FLOATING MOUNT**

Designed specifically for the Pioneer DMH-C5500NEX 8" radio

- A universal solution to install a Pioneer DMH-C5500NEX 8-inch radio with a separate screen and chassis into just about anything
- A complete housing encases the Pioneer's 8-inch screen
- Designed to "float" the Pioneer 8-inch screen in front of a vehicle's original radio location using the case and bracket combination
- A series of brackets provide the ability to easily mount the radio's chassis into the radio/pocket location of 250+ existing Metra Double-DIN kits for 1990 to current vehicle applications

*** Visit MetraOnline.com For Up-To-Date Vehicle Specific Applications**

FITS CHEVROLET / FORD

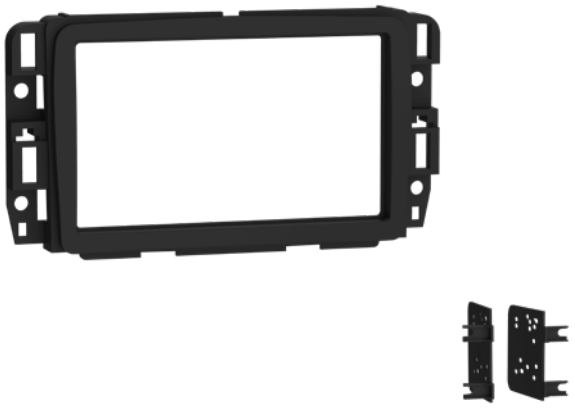

95-3031B

P D

CHEVROLET **CAPTIVA SPORT** 2012-2015 (with factory NAV)

- Parts included for ISO-DDIN installations
- Painted scratch-resistant matte black to match the factory finish

99-3031B

P

CHEVROLET **CAPTIVA SPORT** 2012-2015 (with factory NAV)

- Parts included for ISO-DIN installations
- Includes storage pocket
- Painted scratch-resistant matte black to match the factory finish

99-5853CH

Turbo Tactile

P D

FORD **MUSTANG** 2010-2014

- Factory style hard buttons with laser etched graphics to retain and control most climate functions normally lost when removing factory radio
- Easy to use rotary knobs with LCD status displays for temp and fan speed
- Retains steering wheel functionality
- Parts included for installation of Single-DIN and Double-DIN radios
- Integrated hazard button and passenger airbag indicator
- Painted to match the factory finish

99-5855CH

Turbo Tactile

P D

FORD **EDGE** 2011-2014 (single zone, manual climate models)

- Factory style hard buttons with laser etched graphics to retain and control most climate functions normally lost when removing factory radio.
- Easy to use rotary knobs with LCD status displays for temp and fan speed
- Retains steering wheel functionality
- Parts included for installation of Single-DIN and Double-DIN radios
- Integrated hazard button and passenger airbag indicator
- Painted to match the factory finish

FITS FORD / DODGE

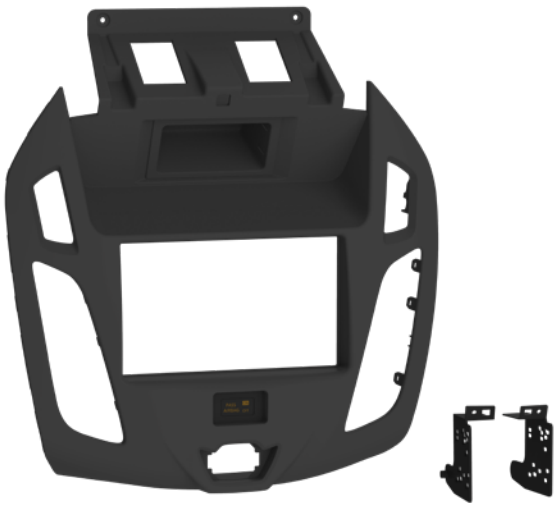

99-5856B P D

FORD **TRANSIT 2014-2018** (with no factory display)

- ISO Double-DIN radio provision
- ISO Single-DIN radio provision with pocket
- Painted scratch-resistant matte black to match the factory finish
- Includes passenger airbag indicator

99-5857B P D

FORD **RANGER 2019-UP*** (with factory 4.2" screen)

- Parts included for both ISO Single-DIN and ISO Double-DIN installations
- Includes parts that allow the retention of the factory climate control panel, passenger airbag indicator and hazard button
- Painted scratch-resistant matte black to match the factory appearance

99-5858CH Turbo Touch P D

FORD **EXPLORER 2011-2019** (with factory 8" screen)

- Parts included for both ISO Single-DIN and ISO Double DIN installations
- Touchscreen display for climate, audio interfacing and personalization features
- Included interface for climate and steering wheel functions
- Painted charcoal to match the factory finish

COMING SOON NEW TECH

99-6552B Turbo Touch P D

DODGE **CHARGER 2015-UP***

- An all new seven inch touchscreen with buttons will retain and control all climate and most vehicle customization functions normally lost when removing factory radio components
- Patent pending touch screen design also retains the factory steering wheel functions and safety features including the backup camera
- Painted scratch-resistant matte black to match the factory appearance

FITS CHRYSLER / DODGE / JEEP

COMING SOON
NEW TECH

Turbo Touch

99-6553B P D

CHRYSLER **300** 2015-UP*

- An all new seven inch touchscreen with buttons will retain and control all climate and most vehicle customization functions normally lost when removing factory radio components
- Patent pending touch screen design also retains the factory steering wheel functions and safety features including the backup camera
- Painted scratch-resistant matte black to match the factory appearance

PATENT PENDING

95-6554B P D

JEEP **CHEROKEE** 1997-2001

- ISO Double-DIN radio provision
- Complete panel for a factory look and feel
- Painted scratch-resistant matte black

COMPACT CHASSIS TOP MOUNT

95-6555B P

DODGE **RAM** 1994-1997

- Intended for installation of Sony L-shaped radios with chassis on the top, Pioneer 6.8" radio, or other shallow mount radios
- Traditional DDIN radios can be installed with extensive sub-dash modifications
- Painted scratch resistant matte black to match the factory finish

95-6556G P D

JEEP **COMMANDER** 2006-2007

- Designed specifically for ISO-DDIN installations
- Painted gray to match the factory dash panel

T TEXTURED P PAINTED D DOUBLE-DIN

FITS JEEP / HYUNDAI / KIA

95-6556DK P D

JEEP **COMMANDER** 2006-2007

- Designed specifically for ISO-DDIN installations
- Painted dark khaki to match the factory dash panel

99-7394B PATENT PENDING P

KIA **FORTE** 2019-UP*

- Designed for most Single-DIN radios and a special design for ISO Double-DIN radios with an "L" shaped chassis design with the radio chassis at the bottom of the screen. Specifically Alpine INE-W967HD, INE-W977HD, iLX-107, and iLX-207 (refer to radio manufacturer for current models)
- Special brackets included for Pioneer modular radios DMH-C2550NEX and DMH-C2500NEX (refer to radio manufacturer for current models)
- Painted scratch-resistant matte black

99-7395B P D

HYUNDAI **ELANTRA TOURING** 2009-2012

- Parts included for both ISO Single-DIN and ISO Double-DIN installations
- Cutting template included to simplify modifying the factory dash panel
- Painted scratch-resistant matte black to match the factory finish

95-7396 P

HYUNDAI **SANTA FE** 2019-UP*

- Designed for most Single-DIN radios and a special design for ISO Double-DIN radios with an "L" shaped chassis design with the radio chassis at the bottom of the screen. Specifically Alpine INE-W967HD, INE-W977HD, iLX-107, and iLX-207 (refer to radio manufacturer for current models)
- Special brackets included for Pioneer modular radios DMH-C2550NEX and DMHC2500NEX (refer to radio manufacturer for current models)
- Painted scratch-resistant matte black with a bright silver trim to match the factory appearance

FITS MAZDA / NISSAN

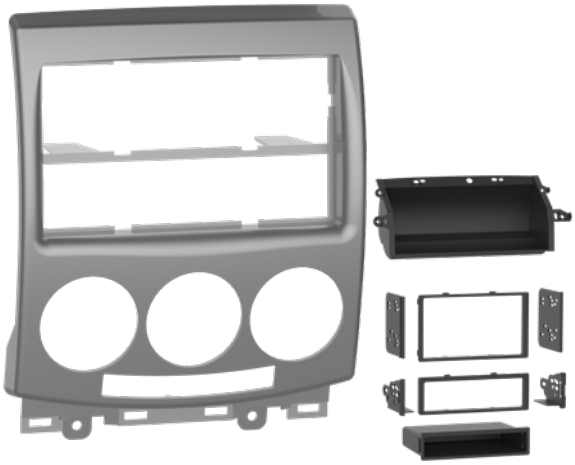

99-7527S P D

MAZDA **5** **2006-2007** (with factory NAV)
- Storage pocket included to replace the factory NAV screen
- Designed for Single-DIN radio provision with pocket or Double-DIN radio provision
- Painted silver

95-7636B PATENT PENDING P D

NISSAN **KICKS** **2018-UP***
- Designed specifically for Double-DIN installations
- Painted scratch-resistant matte black to match the factory finish

99-7636B PATENT PENDING P D

NISSAN **KICKS** **2018-UP***
- Pocket included for Single-DIN installations
- Painted scratch-resistant matte black to match the factory finish

COMPACT CHASSIS BOTTOM MOUNT

95-7637 PATENT PENDING P

NISSAN **ALTIMA** **2019-UP***
- Designed specifically for an ISO Double-DIN radio with an "L" shaped chassis design with the radio chassis at the bottom of the screen. Specifically Alpine INE-W967HD, INE-W977HD, iLX-107, and iLX-207 (refer to radio manufacturer for current models)
- Special brackets included for Pioneer modular radios DMH-C2550NEX and DMH-C2500NEX (refer to radio manufacturer for current models)
- Painted gloss black with bright silver trim and a textured back plate to match the factory finish

T TEXTURED P PAINTED D DOUBLE-DIN

FITS NISSAN / HONDA / LEXUS

99-7637 PATENT PENDING P

NISSAN **ALTIMA** 2019-UP*

- Designed specifically for single ISO Single-DIN installations
- Painted gloss black with bright silver trim and a textured back plate to match the factory finish

COMING SOON

99-7821B Turbo Touch P D

HONDA **CIVIC EX AND HIGHER** 2016-UP*

- Parts included for both ISO-DIN and ISO-DDIN installations
- Touchscreen display for climate, audio interfacing and personalization features
- Included interface for climate and steering wheel functions
- Painted scratch-resistant matte black to match the factory finish

99-8164G Turbo Touch P D

LEXUS **RX300** 1999-2003

- Parts included for both ISO-DIN and ISO-DDIN installations
- Touchscreen display for climate, audio interfacing and personalization features
- Included interface for climate and steering wheel functions
- Painted gray to match the factory finish

99-8164T Turbo Touch P D

LEXUS **RX300** 1999-2003

- Parts included for both ISO-DIN and ISO-DDIN installations
- Touchscreen display for climate, audio interfacing and personalization features
- Included interface for climate and steering wheel functions
- Painted tan to match the factory finish

FITS TOYOTA / MERCEDES / SUBARU

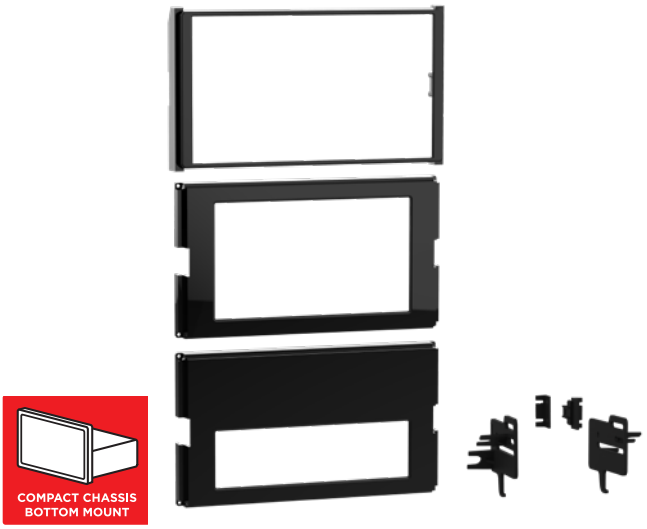

99-8270HG

P

TOYOTA **COROLLA HATCHBACK** 2019-UP* | **COROLLA** 2020-UP*

- Designed for most Single-DIN radios and a special design for ISO Double-DIN radios with an "L" shaped chassis design with the radio chassis at the bottom of the screen. Specifically Alpine INE-W967HD, INE-W977HD, iLX-107, and iLX-207 (refer to radio manufacturer for current models)
- Special brackets included for Pioneer modular radios DMH-C2550NEX and DMH-C2500NEX (refer to radio manufacturer for current models)
- Painted high gloss black to match the factory finish

99-8731

PATENT PENDING D

MERCEDES **SPRINTER** 2019-UP* (excluding models with factory touch screen)

- Pocket included for Single-DIN installations
- Polished gloss black to match the factory finish

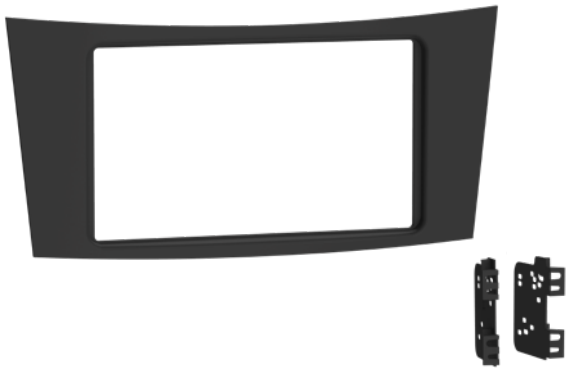

95-8732B

P D

MERCEDES **E-CLASS** 2003-2009

- Designed specifically for ISO Double-DIN installations
- Painted scratch-resistant matte black to match the factory appearance

95-8911HG

PATENT PENDING P D

SUBARU **ASCENT** 2019-UP*

- ISO Double-DIN radio provision
- Painted gloss black

FITS SUBARU / VOLKSWAGEN

99-8911HG PATENT PENDING P

SUBARU **ASCENT** 2019-UP*
- ISO Single-DIN radio provision with pocket
- Painted gloss black

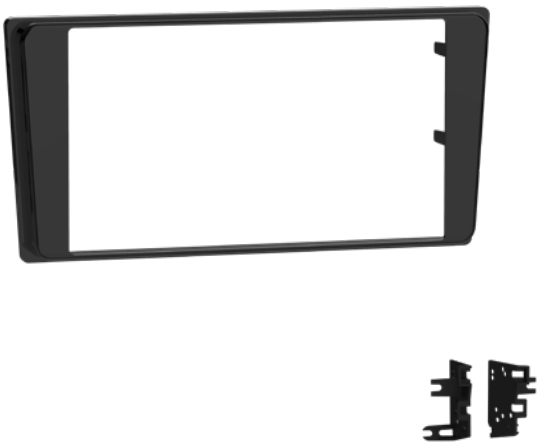

95-8912HG P D

SUBARU **BRZ** 2016-UP*
- ISO Double-DIN radio provision
- Painted gloss black to match the factory appearance

99-8912HG P

SUBARU **BRZ** 2016-UP*
- ISO Single-DIN radio provision with pocket
- Painted gloss black to match the factory appearance

99-9014HG PATENT PENDING P

VOLKSWAGEN **JETTA** 2019-UP*
- Specifically designed for an ISO Double-DIN radio with an "L" shaped chassis design with the radio chassis at the top of the screen (or the current Pioneer 6.8" screen and separate chassis)
- Painted a color-matched gloss black to match the factory finish
- Blank plate included for Single-DIN installations

FITS MINI

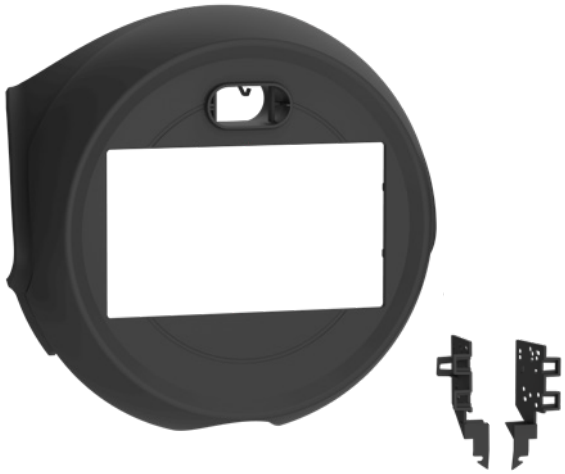

99-9326B

P D

MINI **COOPER HARDTOP COUPE (F56)** 2014-2017*
COOPER SEDAN (F55) 2015-2017* (with Base radio)

- Parts included for both ISO Single-DIN and ISO Double-DIN installations
- Painted scratch-resistant matte black to match the factory finish
- Retains the factory hazard button

* Base model radios without high-def display only

FITS TOYOTA / VW

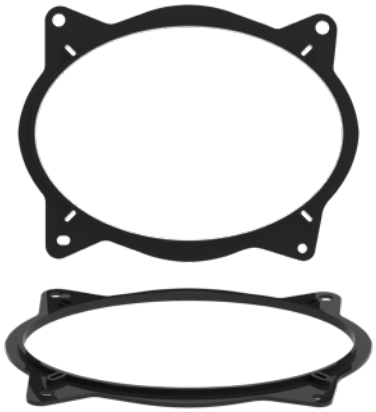

82-8154

TOYOTA **AVALON** 2013-2017 | TOYOTA **CAMRY** 2012-2017
TOYOTA **COROLLA** 2014-2017 (rear locations)

- Adapts an aftermarket 6"x9" to the factory rear deck location
- Use along with Metra's 82-6901 for mounting 6" speakers
- Sold as a pair

82-9010

VW **ATLAS** 2018-UP*

- Adapts an aftermarket 6.5" up to 6.75" to the factory front door location
- Sold as a pair

T TEXTURED P PAINTED D DOUBLE-DIN

AT YOUR FINGERTIPS

SUBSCRIBE!

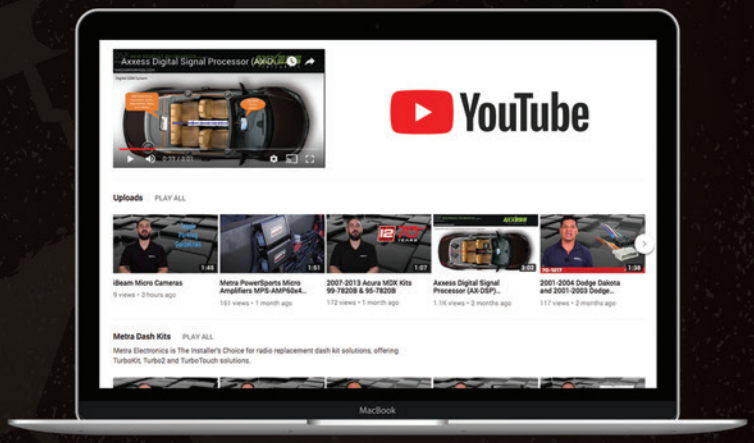

- NEW PRODUCTS
- INSTRUCTION VIDEOS

www.facebook.com/MetraElectronics

www.twitter.com/MetraElectronic

www.youtube.com/user/MetraElectronics

www.instagram.com/MetraElectronics

Order Anytime Day or Night
at www.MetraDealer.com

Download all our New Catalogs
at www.MetraOnline.com

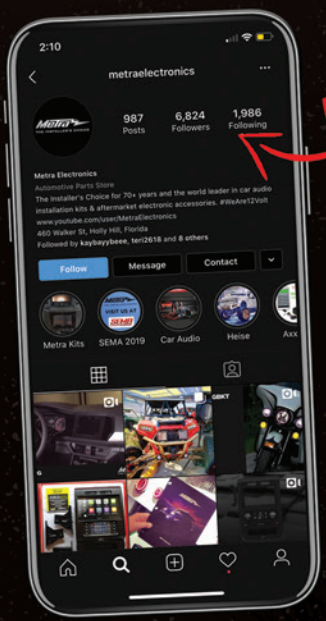

SOCIAL MEDIA

Follow Us!

- FEATURED INSTALLS
- Q & A

SHARE YOUR PROJECT PHOTOS WITH US
FOR A CHANCE TO BE FEATURED ON OUR SOCIAL MEDIA.
TAG @METRAELECTRONICS IN YOUR POSTS!

SUPER SLIMLINE SERIES

HE-SS550 — 5.5 INCH — 3 LED — NEW!

Wattage: 9W • **Raw Lumens:** 810lm
Current Consumption @ 13.8V: 0.55A • **IP Rating:** IP67

HE-SS9 — 9 INCH — 6 LED — NEW!

Wattage: 18W • **Raw Lumens:** 1620lm
Current Consumption @ 13.8V: 1.08A • **IP Rating:** IP67

HE-SS2050 — 20.5 INCH — 15 LED — NEW!

Wattage: 45W • **Raw Lumens:** 4050lm
Current Consumption @ 13.8V: 2.80A • **IP Rating:** IP67

HE-SS32 — 32 INCH — 24 LED — NEW!

Wattage: 72W • **Raw Lumens:** 6480lm
Current Consumption @ 13.8V: 4.55A • **IP Rating:** IP67

HE-SS3950 — 39.5 INCH — 30 LED — NEW!

Wattage: 90W • **Raw Lumens:** 8100lm
Current Consumption @ 13.8V: 5.78A • **IP Rating:** IP67

HE-SS51 — 51 INCH — 39 LED — NEW!

Wattage: 117W • **Raw Lumens:** 10530lm
Current Consumption @ 13.8V: 7.60A
IP Rating: IP67

SPECS & MEASUREMENTS

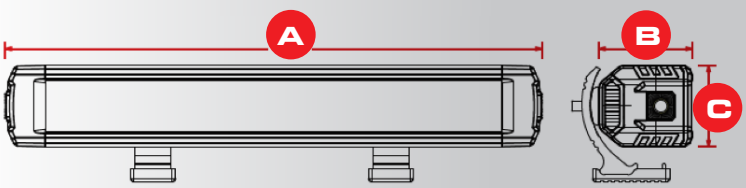

PART	A	B	C
HE-SS5.5	5.59”	2.05”	1.77”
HE-SS9	9.37”	2.05”	1.77”
HE-SS20.5	20.71”	2.05”	1.77”
HE-SS32	32.05”	2.05”	1.77”
HE-SS39.5	39.61”	2.05”	1.77”
HE-SS51	50.94”	2.05”	1.77”

AUXILIARY LIGHTING

HE-DRL2PK-55 | 5.5 INCH | 2 PACK

- Self-adhesive
- LED color: white
- Voltage: 12V DC

HE-DRL2PK-67 | 6.7 INCH | 2 PACK

- Self-adhesive
- LED color: white
- Voltage: 12V DC

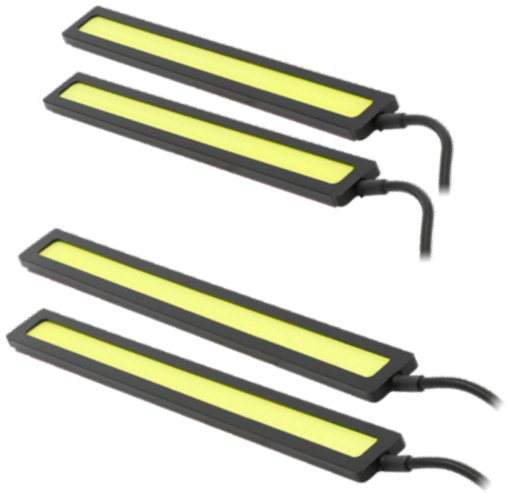

TURN / BRAKE / BACKUP BULBS

INTEGRATED INTERNAL CANBUS SYSTEM

REPLACEMENT BULBS | 2 PACK

COLOR	T10 APPLICATIONS
WHITE	HE-CT10W
AMBER	HE-CT10A

COLOR	T15 APPLICATIONS
WHITE	HE-CT15W
AMBER	HE-CT15A

COLOR	1156 APPLICATIONS
WHITE	HE-C1156W
AMBER	HE-C1156A

BULB REPLACEMENT GUIDE

COLOR	1157 APPLICATIONS
WHITE	HE-C1157W
WHITE	HE-C1157A

COLOR	7440 APPLICATIONS
WHITE	HE-C7440W
AMBER	HE-C7440A

COLOR	7443 APPLICATIONS
WHITE	HE-C7443W
AMBER	HE-C7443A

COLOR	3156 APPLICATIONS
WHITE	HE-C3156W
WHITE	HE-C3156A

COLOR	3157 APPLICATIONS
WHITE	HE-C3157W
AMBER	HE-C3157A

BULB REPLACEMENT GUIDE

RGB PRODUCTS

RGB-CB1 | 4 TRIGGERS | RGB CONTROL BOX

- For RGB1-4KT
- App controlled Android™ / iOS®
- Wireless BLE control
- 16 million color options
- Group multiple devices
- Camera color capture
- Sync lighting to your music
- Rainbow, water, and fire patterns
- Fade, blink and pulsating transitions
- 4 programmable triggers
- Handles up to 10 amps of lights

RGB1-4KT | RGB | 4 POD ROCK LIGHT SET

RGB LEDS

- Use with RGB-CB1
- (3) 3-watt Cree LEDs per pod
- 9 watts per pod
- Raw lumens: 720lm
- Stainless 316 hardware included
- Black die-cast aluminum housing
- Current consumption @ 13.8 volts 0.2 amps
- PC lens - IP68 rated
- Works with RGB-CB1 (sold separately)

HE-TL1RGB | IP68 | SINGLE RGB ROCK LIGHT

RGB LEDS

- (3) 3-watt Cree LEDs per pod
- 9 watts per pod
- Raw lumens: 720lm
- Stainless 316 hardware included
- Black die-cast aluminum housing
- PC lens - IP68 rated
- Works with RGB-CB1 (sold separately)

RGB-Y1 | 6 INCH | "Y" ADAPTER

- 6" RGB Y adapter
- 1 male - 2 female
- 4-pin connector works with RGB1-4KT and HE-TL1RGB

RGB-PT1 | 4 PIN | PIGTAIL ADAPTER

- 4-pin RGB hardwire pigtail

HE-EXTRGB | 10 FOOT | 4-PIN EXTENSION

- 4-pin extension cable
- 10 feet long
- Used with RGB-CB1 and HE-TL1RGB

RGBW PRODUCTS

RGBW-CB1 | 4 TRIGGERS | RGBW CONTROL BOX

- For RGBW1-4KT
- App controlled Android™ / iOS®
- Wireless BLE control
- 16 million color options
- Group multiple devices
- Camera color capture
- Sync lighting to your music
- Rainbow, water, and fire patterns
- Fade, blink and pulsating transitions
- 4 programmable triggers
- Handles up to 10 amps of lights

RGBW1-4KT | IP68 | 4 POD ROCK LIGHT KIT

RGB LEDS + TRUE WHITE LEDS

- RGB LED + True White LED
- (24) 3030 LEDs per pod
- 24 watts per pod
- Black die-cast aluminum housing
- PC lens - IP68 rated
- Works with RGBW-CB1 (sold separately)

RGBW1-S1 | IP68 | SINGLE RGBW ROCK LIGHT

RGB LEDS + TRUE WHITE LEDS

- RGB LED + True White LED
- (24) 3030 LEDs per pod
- 24 watts per pod
- Black die-cast aluminum housing
- PC lens - IP68 rated
- Works with RGBW-CB1 (sold separately)

RGBW-Y1 | "Y" ADAPTER

- 6" RGB Y adapter
- 1 male - 2 female
- 5-pin connector works with RGBW1-4KT and RGBW1-S1

RGBW-PT1 | PIGTAIL ADAPTER

- 5-pin RGBW hardwire pigtail

RGBW1-EXT | 5-PIN EXTENSION

- 5-pin 10 foot extension cable
- Used with RGBW-CB1 and RGBW1-S1
- IP68

RGB-CB3 | 4 TRIGGERS | RGB CONTROL BOX FOR 702RGB HEADLIGHTS/FOG LIGHTS

- Heise RGB Control Box
- Used for part # HE-PBHL702RGB HL and HE-JWBFL02RGB
- App controlled Android® / IOS®
- Wireless BLE control
- 16 million color options
- Group multiple devices
- Camera color capture
- Sync lighting to your music
- Rainbow, water, and fire patterns
- Fade, blink and pulsating transitions
- 4 programmable triggers
- Handles up to 10 amps
- Flat 4-pin

MPS-RZR01

DOUBLE DIN

POLARIS® RZR MULTI-APP** RADIO KIT

2014-2019

+ Replaces OE pocket or cover plate

2015-2019	RZR 900	2019	RZR S 4 1000
2015-2019	RZR S 900	2014-2019	RZR XP 4 1000
2015-2017	RZR 4 900 EPS	2016-2019	RZR XP TURBO
2016-2018	RZR S4 900 EPS	2016-2018	RZR XP 4 TURBO
2015-2017	RZR 900 XC EDITION	2018-2019	RZR XP TURBO S
2014-2019	RZR XP1000	2019	RZR XP 4 TURBO S
2016-2019	RZR S 1000		

MPS-GEN01

DOUBLE DIN

POLARIS® UTV RADIO KIT

2016-UP*

+ Mounting of ISO Double-DIN radios
+ Custom texture
+ Replaces OE pocket or cover plate

MPS-GEN02

UTV APPLICATIONS

POLARIS® UTV RADIO GAUGE MOUNTING KIT

2016-UP*

+ Universal blank plate for gauge mount radios
+ Custom texture

95-9999

DOUBLE DIN

RADIO KIT

UNIVERSAL

+ ISO brackets moulded to front plate
+ Cut to fit front plate

MPS-RZSP

SPEAKER ENCLOSURE

POLARIS® RZR 6.5" - 6.75" SPEAKER PODS

2014-UP*

+ HDPE construction
+ Left and right front kick panel speaker pods
+ Bolts into the upper foot well, away from your feet
+ Black texture coat finish to match Polaris textures
+ Includes stainless mounting hardware

MPS-RZSB

SPEAKER ENCLOSURE

POLARIS® RZR SUBWOOFER BOX + AMP BRACKET

2014-UP*

+ HDPE construction
+ Provides a 10 sub mounting solution
+ Replaces the entire glove box
+ Black texture coat finish to match Polaris textures
+ Includes stainless mounting hardware
+ Includes amplifier mounting bracket

MPS-RZKIT

AUDIO UPGRADE PACKAGE

POLARIS® RZR SPEAKER PODS + SUBWOOFER BOX + AMP BRACKET

2014-UP*

+ HDPE construction
+ Package includes MPS-RZSP + MPS-RZSB

RGB PRODUCTS

RGB-CB2
PROGRAMMABLE TRIGGERS
RGB CONTROL BOX

FOR RGB2-4KT

+ App controlled Android® / IOS®
+ Wireless BLE control
+ 16 million color options
+ Group multiple devices
+ Camera color capture
+ Sync lighting to your music
+ Rainbow, water, and fire patterns
+ Fade, blink and pulsating transitions
+ 4 programmable triggers
+ Handles up to 10 amps of lights

RGB2-4KT
LIGHTING PODS
RGB 4-STRING LED ROCK LIGHT SET

USE WITH RGB-CB2

RGB LEDS

+ 4 piece kit
+ 3 LED pods per strip
+ 5 LEDs per pod
+ IP68
+ Used with RGB-CB2 controller (sold separately)
+ 4-pin micro DIN connector

RGB2-S1
SINGLE LIGHT
SINGLE RGB STRING LIGHT

USE WITH RGB-CB2

RGB LEDS

+ 3 LED pods per strip
+ 5 LEDs per pod
+ IP68
+ Used with RGB-CB2 controller (sold separately)
+ 4-pin micro DIN connector

MPS-ECRGB36
RGB ACCESSORY
RGB 36" EXTENSION

USE WITH RGB-CB2

+ Male micro DIN 4-pin and female micro DIN 4-pin connectors
+ Works with MPS-RGBWWS4 and RGB2-4KT

MPS-ECRGB72
RGB ACCESSORY
RGB 72" EXTENSION

USE WITH RGB-CB2

+ Male micro DIN 4-pin and female micro DIN 4-pin connectors
+ Works with MPS-RGBWWS4 and RGB2-4KT

RGB-PT2
RGB ACCESSORY
6" HARDWIRE PLUG

USE WITH RGB-CB2

+ 4-pin RGB hardwire plug

RGB-Y2
RGB ACCESSORY
RGB "Y" ADAPTER

6"

+ One 4-pin female micro DIN to two micro DIN males
+ Used with RGB2-S1, MPS-RGBWWS4 and RGB-CB2

RGBW PRODUCTS

RGBW-CB2
PROGRAMMABLE TRIGGERS
RGBW CONTROL BOX
FOR RGBW2-4KT

+ App controlled Android® / IOS®
+ Wireless BLE control
+ 16 million color options
+ Group multiple devices
+ Camera color capture
+ Sync lighting to your music
+ Rainbow, water, and fire patterns
+ Fade, blink and pulsating transitions
+ 4 programmable triggers
+ Handles up to 10 amps of lights

RGBW2-4KT
LIGHTING PODS
RGBW 4-STRING LED ROCK LIGHT SET
USE WITH RGBW-CB2

RGB LEDS + TRUE WHITE LEDS

+ RGB LED + True White LED
+ 4 piece kit
+ 3 LED Pods per strip
+ 5 LED's per Pod
+ IP68
+ 5-pin micro DIN connector
+ Used with RGBW-CB2 controller (sold separately)

RGBW2-DL
RGBW LIGHTING
RGBW DOME LIGHT
USE WITH RGBW-CB2

RGB LEDS + TRUE WHITE LEDS

+ RGBW LED dome light 5-pin
+ Multiple mounting options
+ 10' cable
+ RGBW -CB2 (sold separately)

RGBW2-S1
SINGLE LIGHT
SINGLE RGBW STRING LIGHT
USE WITH RGBW-CB2

RGB LEDS + TRUE WHITE LEDS

+ RGB LED + True White LED
+ 3 LED Pods per strip
+ 5 LED's per Pod
+ IP68
+ Used with RGBW-CB2 controller (sold separately)
+ 5-pin micro DIN connector

RGBW-36
RGBW ACCESSORY
RGBW 36" EXTENSION
USE WITH RGBW-CB2

+ Male micro DIN 5-pin and female micro DIN 5-pin connectors
+ Works with MPS-RGBWWS4 and RGBW2-4KT

RGBW-72
RGBW ACCESSORY
RGBW 72" EXTENSION
USE WITH RGBW-CB2

+ Male micro DIN 5-pin and female micro DIN 5-pin connectors
+ Works with MPS-RGBWWS4 and RGBW2-4KT

RGBW-PT2
RGBW ACCESSORY
6" HARDWIRE PLUG
USE WITH RGBW-CB2

+ 5-pin RGBW hardwire plug

RGBW2-Y
RGBW ACCESSORY
6" "Y" ADAPTER
USE WITH RGBW-CB2

+ One 5-pin female micro DIN to two micro DIN males
+ Add additional RGBW lights

BC-SPG

MOTORCYCLE

SPEAKER GRILLE PAIR

UNIVERSAL

+ 6.5" to 6.75" speaker grille
+ Comes with black mounting hardware
+ Same grille supplied with BC-HDLFP
+ Metal mesh with matte black finish
+ Sold as pair

+ Metal mesh grille (BC-SPG) shown is sold separately

BC-HDLFPP

LOWER FAIRING SPEAKER POD PAIR

FITS HARLEY-DAVIDSON®

2014-UP*

+ Allows 6.5" to 6.75" speakers
+ Comes with ported enclosure & tunes to maximize bass response
+ Fits OEM and saddle tramp* lower fairings
+ Paintable black finish
+ Does not fit models with Twin-Cooled® engines

BC-HBTS

DUAL COLOR

HANDLEBAR LED INDICATORS

UNIVERSAL

+ Dual color (amber turn / white running)
+ Fits 0.75" up to 0.875" bar inner diameter
+ (12) LEDs (6 amber / 6 white)
+ Aluminum housing with polycarbonate lens
+ May require load equalizers to prevent hyper flashing

BC-HDLFSP2

LOWER FAIRING SPEAKER ASSEMBLY

FITS HARLEY-DAVIDSON®

1997-UP*

+ Fits air-cooled Harley-Davidson® touring models with OE highway bars
+ Road Glide, Road King, Street Glide, Electra Glide
+ Color matched vivid black
+ Accepts 6.5" speakers
+ Mounting hardware included
+ Will not fit Mustache-style highway bars

BC-SDPPAK

RADIO INSTALL KIT FOR L SHAPED DESIGNS

FITS HARLEY-DAVIDSON® POLICE PACKAGE (FLHTP)

▸ 2014-UP*

+ Includes BC-9700P Police Bike Interface harness
+ Includes data interface accessory, handlebar control interface (requires Harley-Davidson® hand controls) and 44-UA20 amplified antenna
+ Designed for L shaped Double-DIN radio installations
+ Water-resistant interface box
+ Molded in ASA plastic

BC-DDPPAK

SINGLE DIN RADIO INSTALL KIT

FITS HARLEY-DAVIDSON® POLICE PACKAGE (FLHTP)

▸ 2014-UP*

+ Includes BC-9700P Police Bike Interface harness
+ Includes data interface accessory, handlebar control interface (requires Harley-Davidson® hand controls) and 44-UA20 amplified antenna
+ Designed for Single-DIN radio installations
+ Water-resistant interface box
+ Molded in ASA plastic

BC-9700P

OEM INTEGRATION HARNESS

FITS HARLEY-DAVIDSON® POLICE PACKAGE (FLHTP)

▸ 2014-UP*

+ Allows plug-n-play installation of Harley-Davidson® Boom!™ Box GTS Radio Kit (76000829)
+ Provides OEM front speaker output connection and rear output connection
+ Dash kit, antenna and interface sold separately

www.facebook.com/MetraElectronics

www.twitter.com/MetraElectronic

www.youtube.com/user/MetraElectronics

www.instagram.com/MetraElectronics

Order Anytime Day or Night at www.MetraDealer.com

Download all our New Catalogs at www.MetraOnline.com

CORPORATE HEADQUARTERS
Metra Electronics Corporation
460 Walker Street
Holly Hill, FL 32117-2699

Metra Corporate: 386.257.1186
Metra 12volt & International Sales: 386.257.2956
Sales Fax: 386.258.3940

WAREHOUSE OPERATIONS
Daytona Beach, FL
Dallas, TX
Freehold, NJ
Lexington, KY
Fresno, CA
Long Beach, CA

OVERSEAS OPERATIONS
Taipei, Taiwan R.O.C. • Hong Kong

Metra®
THE INSTALLER'S CHOICE

MetraOnline.com
MetraDealer.com
ORDERS: 386.257.2956

CORPORATE HEADQUARTERS:
Metra Electronics Corporation
460 Walker Street
Holly Hill, FL 32117-2699

© Copyright 2020 – Metra Electronics Corporation

0 86429 39019 9

CESBRO-20